PLC 816

Programmable Lighting Controller

OPERATOR'S MANUAL

Fender Musical Instrument Corporation
1130 Columbia Street
Brea, CA 92621

Table of Contents

1 - INTRODUCTION 1

2 - SYSTEM CONNECTION 2

POWER JACK 2
OUTPUT JACKS 2
AUDIO SYNC INPUT JACK 4
FOOTSWITCH JACK 4
MIDI IN 4
MIDI OUT 4
MIDI THROUGH 4

3 - SLIDE CONTROLS 5

CHANNEL FADERS 5
AUDIO SYNC SLIDER 6
CHASE SPEED 6
FADE TIME 6
GRAND MASTER 6

4 - SWITCH CONTROLS 7

BANK SWITCH 7
SPECIAL FUNCTION SWITCH 7
SONG SWITCH 7
AUDIO SYNC SWITCH 7
CHASE FORWARD SWITCH 7
CHASE REVERSE 8
CHASE SPLIT 8
FULL FLASH SWITCH 8
USER SWITCHES 8
BLACK SWITCH 8
GO SWITCH 9
UP AND DOWN SWITCHES 9
DELETE SWITCH 9
INSERT SWITCH 9
ENTER SWITCH 9
FLASH CHANNELS 10

5 - SAVING SCENES 11

6 - SONG MODE 12

ENTERING SONG INFORMATION 12
EDIT SCENE NUMBER 13
EDIT FADE TIME 13
DELETE STEP 13
DELETE SONG 13
INSERT STEP 14
ADDING MORE STEPS TO END OF SONG 14

7 - MIDI 15

USING A MIDI SEQUENCER 15
USING A MIDI CONTROLLER 17
DUMPING THE MEMORY 17
MIDI DATA FORMAT 18

8 - SPECIAL FUNCTIONS 19

F0 - FLASH MODE 19
F1 - SET MIDI CHANNEL 19
F2 - SET MAXIMUM CHASE CHANNEL 19
F3 - DISPLAY AMOUNT OF SONG MEMORY LEFT 20
F4 - INITIATE MEMORY DUMP 20
F5 - MIDI TRANSMIT MODE 20
F6 - CHANGE MEMORY CONFIGURATION 20
F7 - RESET ENTIRE MEMORY 21

9 - TROUBLESHOOTING 22

DIMMER PACKS 22
LIGHTS 23
MIC CORD 23
CONTROLLER 23

10 - SERVICE INFORMATION 24

LIGHTS 24
GELS 24

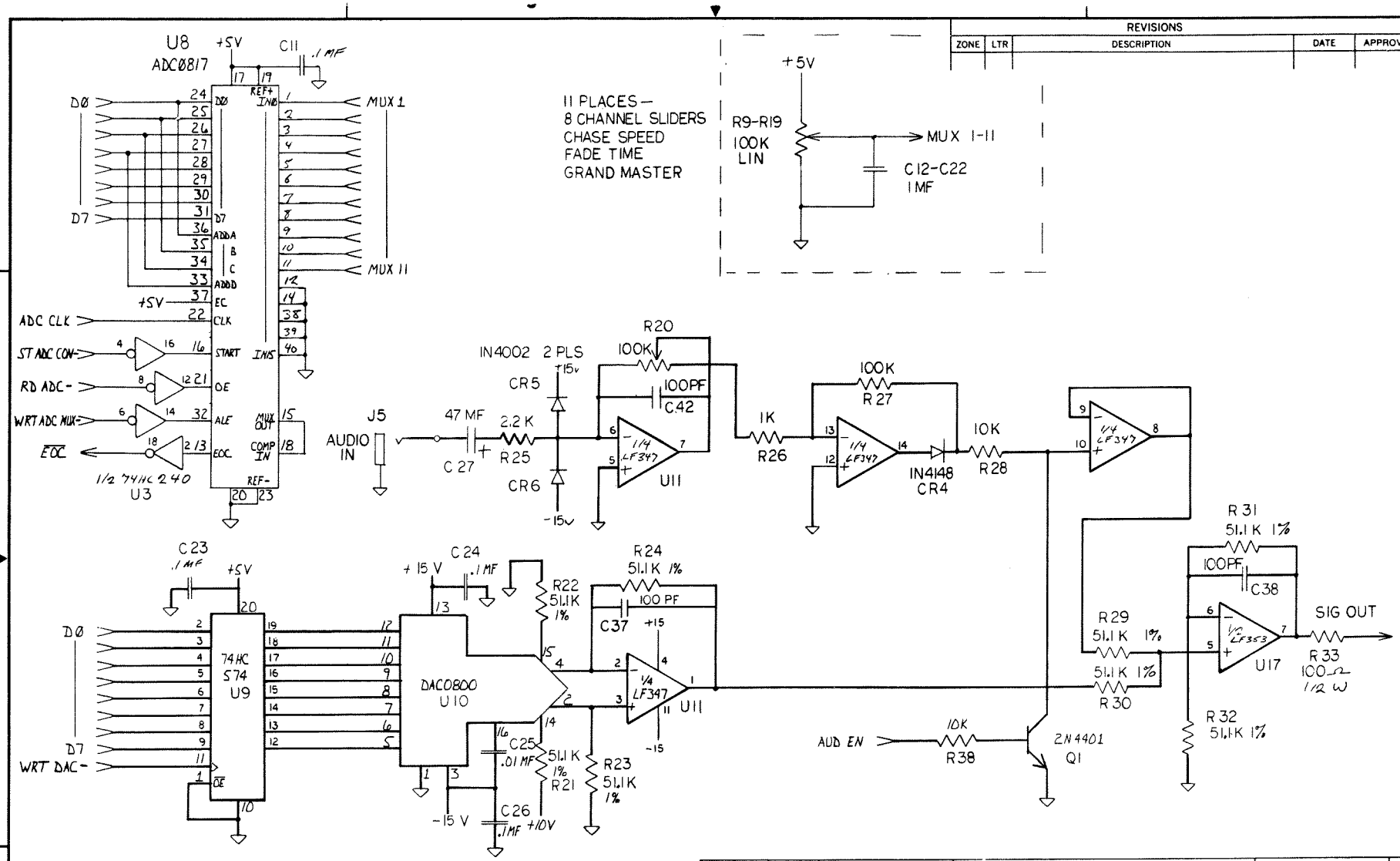

REVISIONS				
ZONE	LTR	DESCRIPTION	DATE	APPROVED

QTY REQD	CODE IDENT	PART OR IDENTIFYING NO.	NOMENCLATURE OR DESCRIPTION

PARTS LIST

UNLESS OTHERWISE SPECIFIED DIMENSIONS ARE IN INCHES TOLERANCES ARE:
FRACTIONS ± DECIMALS .XX ± .XXX ± ANGLES ±

MATERIAL

FINISH

DO NOT SCALE DRAWING

CONTRACT NO.

APPROVALS	DATE
DRAWN KY	7/10/86
CHECKED	

SUNN PROGRAMMABLE LIGHTING CONTROLLER PLC 816

SIZE C | CODE IDENT NO. | DRAWING NO.

SCALE | SHEET 2 OF 3

NEXT ASSY	USED ON
APPLICATION	

1 - INTRODUCTION

The PLC 816 is a fully programmable sixteen channel stage lighting control console with memory storage of up to one hundred and one "scenes" or "cues" and up to thirty "songs" which are pre-programmed sequences of scenes. Features include two dual digit numerical displays which show the current scene number and the next scene number, a "GO" switch and also a footswitch to initiate a timed crossfade from the current scene to the next scene, a fade time control which determines the length of the crossfade, a grand master control for overall intensity, two user programmable switches for instant access to two often used scenes, a full flash switch to bring all light channels to maximum intensity, and a black out switch to turn all light channels off. Special effects include three chase modes, forward, reverse, and split, with a control for the speed of the chase, and audio sync which allows the light intensity to be controlled by an audio source making the lights appear to pulse in time to the music. All special effects settings can be stored with the scenes. A full MIDI implementation is also provided allowing you to connect the PLC 816 to a MIDI controller or sequencer to create automated lighting effects.

Like all SUNNSPOTS components, the PLC 816 uses the SUNNPLEX multiplexing system that allows the various parts of the lighting system to be interconnected by way of standard three conductor microphone cables. The application of this technology to stage lighting equipment makes system setup and operation easy and convenient. Also, in most cases, SUNNPLEX allows coded lighting control signals to be sent through audio snakes without interference to other signals.

2 - SYSTEM CONNECTION

POWER JACK

Figure 1 shows a drawing of the rear panel of the PLC 816. To the far left is the power jack where an optional external power supply can be connected. With the SUNNPLEX system the SUNN controllers derive their power directly from the SUNN dimmer packs via the mic cable which connects them. The PLC 816 also operates in this fashion eliminating the need for an external power supply. The power jack is provided for those users who only wish to use the PLC 816 as a MIDI controller where SUNN dimmer packs are not connected at all to the PLC 816. In this case a common AC to DC wall mount transformer can be used to power the PLC 816. The supply must deliver at least 7 volts DC at 400 milli-amps, 9 to 12 volts is recommended however. The plug polarity must be negative at the center and positive at the shell.

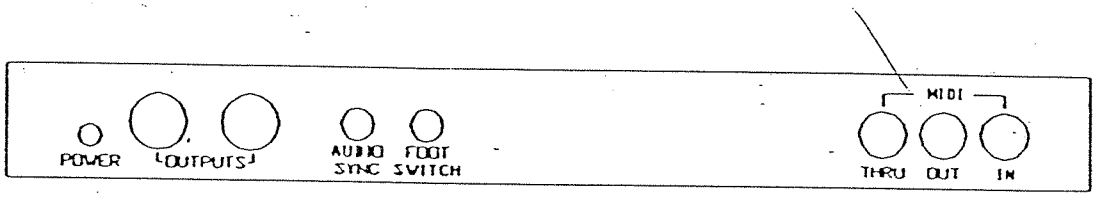

fig. 1 rear panel

There is no on/off switch on the PLC 816 so it powers up whenever you connect it to a power supply or whenever you connect it to a SUNN dimmer pack that is turned on. If you have lights connected to the dimmers they will immediately turn off when the PLC 816 turns on. This is because the PLC 816 calls up scene number 00 which is the "black" scene, whenever it powers up.

OUTPUT JACKS

There are two male XLR jacks on the back panel. Either of these jacks may be used to connect the PLC 816 to a SUNN dimmer pack or to the SUNN DePlex 216 using a standard balanced, shielded microphone cable. Both jacks are identical in function so that either or both can be used to connect the controller into the system. As mentioned in the previous section, the PLC 816 is powered from the dimmer packs through the microphone cable.

WARNING: You need to connect at least two dimmer packs to the PLC 816 to supply enough current for it to operate properly. Also marginal mic cables and connectors may cause noticeable problems by delivering insufficient power to the PLC 816.

When interconnecting, you can daisy chain as many as 25 dimmer packs together by using mic cables from one dimmer to the next. If you find that a mic cord is too short to reach between two parts of your lighting system, you can link two cords in series to create a longer one. To do this, simply connect the male end of one cord to the female end of another. Repeat

This is a reminder to show you that the current "stage" scene is a modified version of the stored scene.

AUDIO SYNC SLIDER

Continuing from left to right on the front panel, the "Audio Sync" slider determines the amount of audio signal which is mixed into the lighting signal whenever audio sync is enabled. Adjust the source level of the audio along with this control to get the optimum effect on the lights. For more information on this effect, consult the section in the next chapter regarding audio sync.

CHASE SPEED

As its name implies, this slider adjusts the speed of the chase effects. Its value will also be saved in memory whenever you create a scene with one of the chase effects. Moving this control will cause the period in the "Now" display to light, showing that the existing program has been modified.

FADE TIME

This determines the time it will take for your "Next" scene to crossfade to your "Now" scene when "Go" is pressed. It also determines the fade time when "Black", "User 1" or "User 2" is pressed. The crossfade time can vary from 0 to 10 seconds. It's value is also stored in song mode when you create a song by storing a series of scenes and fade times.

GRAND MASTER

The overall brightness of all the lamps is controlled by this fader. This means that in order to achieve full intensity for a lamp you not only must have its channel fader to full but also the grand master to full. All of the channel faders are scaled by the grand master. This means that when you move a channel slider from its lowest intensity to its highest, the lamp will vary in brightness from off, to however high the grand master is set. When you move the grand master, all the channels will change in intensity but still retain their relative brightness to each other. The grand master also determines the brightness of the chase flashes.

The grand master value is not stored when you save a scene to memory. Although it can be controlled from MIDI, it is more or less a manual control for determining the overall intensity of the entire lighting system. The only exception is when using the "Full Flash" switch. All lights are brought to full intensity as long as "Full Flash" is held, regardless of the grand master.

4 - SWITCH CONTROLS

BANK SWITCH

This determines the bank of lighting channels (1-8 or 9-16) currently being controlled by the channel faders. An LED will light next to the numbers which are above or below the channel faders to indicate the current bank.

SPECIAL FUNCTION SWITCH

This switch accesses eight special functions which are generally used to configure your lighting system. Please consult the chapter "Special Functions" for more information.

SONG SWITCH

This switch enables or disables the song mode of operation. Consult the chapter "Song Mode" for more information.

AUDIO SYNC SWITCH

This enables or disables the audio sync special effect. There is an LED above the switch to indicate when audio sync is on. When enabled, any audio signal present at the audio jack on the rear panel is mixed into the light signal which controls the intensity of the lighting channels. The effect is a "pile on" type effect, which means that the lights are made brighter by the amount of audio signal added. This also means that in order to see the effect, the lights cannot be at or near full intensity to begin with, since they can't be forced to go any brighter by the audio signal. For the most dramatic effect, use a low frequency or pulsing type of audio source such as a drum machine, set the lights to a low intensity or off, then adjust the level from the audio source or the audio sync slider on the PLC 816. The lights will pulse with the intensity of the audio signal.

This effect can be stored as part of a scene when it is saved to memory. Whenever that particular scene is recalled later, the audio sync LED will light indicating that it's active. The value of the audio sync slider is not stored.

CHASE FORWARD SWITCH

This switch enables or disables chase forward, one of the three chase effects. When active, the LED above the switch will light. Also when you press the switch to either turn the effect on or off, the period will light in the "Now" display, showing that the current scene has been modified from its stored value.

With a chase, each channel is flashed in sequence, one channel at a time. The intensity of the chase flash is determined by the grand master. The speed at which the channels chase is determined by the chase speed control. With a forward chase, the chase starts with channel 1 and increments until it reaches the last channel. The last chased channel can be ad-

justed to the number of channels in your system with the special functions menu of the PLC 816. Consult the "Special Functions" chapter on how to do this.

All three chase effects can be stored, along with the speed setting, as a scene. That way when you call that particular scene, you can get a chase at the exact speed you pre-set it at.

CHASE REVERSE

This is different from chase forward in that the channels flash starting from last to first. Other than that, the same things apply as for chase forward.

CHASE SPLIT

This effect creates a chase pattern which starts with the middle channel then alternates and moves towards the first and last channels. For example, if you are using eight chase channels, the pattern would be: 4, 5, 3, 6, 2, 7, 1, 8.

FULL FLASH SWITCH

Pressing this switch temporarily brings all channels to full intensity regardless of any other condition. As soon as you release the switch, all channels revert back to their previous settings before the switch was pressed.

> **CAUTION:** By pressing "Full Flash" you are drawing the maximum power from your AC service all at once. If you are operating with a marginal amperage rating from your fuse box, you will probably blow a fuse, especially if you are driving a lot of lamps.

USER SWITCHES

There are two user programmable switches provided, User 1 and User 2. These give you instant access to scenes which are used most frequently. They can also be used as "panic buttons" if you become lost in your show. A user scene can be any stage look or special effect that you create from the front panel controls. Consult the chapter "Saving Scenes" as to how to save a user scene.

When you press a User switch, "U1" or "U2" will appear in the "Now" display. As with the "Go" switch you can call the scene in two ways. A quick press of the switch will call the scene instantly with no crossfade from the current scene, a longer held switch press (about 1 second) will fade the scene in at the rate determined by the fade time control. Try experimenting with different lengths of switch presses to see just how long to hold the switch, the actual time required is .2 seconds for a timed fade.

BLACK SWITCH

This does exactly what you would think. It brings all channels to 0 (off). By pressing "Black" you are calling scene number 00 which is the blackout scene. If you press and release the switch quickly, the channels will go to black instantly. If you press and hold the switch momentarily (about 1 second), the scene will fade to black at the rate determined by the fade time control (from 0 to 10 seconds).

GO SWITCH

This is the most often used switch. It can also be activated from the footswitch which comes with the PLC 816. "Go" initiates the crossfade from the scene displayed in "Now" to the scene displayed in "Next". A short press will call the next scene instantly with no crossfade, a long press (about 1 second) will crossfade at the rate determined by the fade time control. After "Go" is pressed, the number in the "Next" display is moved to the "Now" display and the number in "Next" is incremented automatically to the next consecutive scene number. In a typical performance you would operate from a cue sheet which would list the scenes in numbered order. With the PLC 816 you can have your list of cues stored in memory as consecutive scene numbers and call them one after the other by simply hitting "Go" at the proper cue and adjusting the fade time if necessary between cues.

In song mode the "Go" switch will call the scenes in the order that they were saved in the song. The advantage of song mode is that you can store the scene numbers in any order and also store different fade times for each cue. Consult the chapter "Song Mode" for more information.

UP AND DOWN SWITCHES

These switches serve several purposes but in general they are used to select a value for whatever operation you happen to be working on. In normal operation of the PLC 816, the up and down switches are used to select the "Next" scene. After hitting "Go" the next consecutive scene number will automatically be placed in the "Next" display. If this isn't the next scene you want, use the up or down switch to select the the scene number you want to be next. The switches will auto-repeat at high speed if you hold them down.

"Up" and "Down" have different functions when you are operating in song mode, saving a scene to memory, or when setting one of the special functions. Consult the individual chapters on each of these operations for more information.

DELETE SWITCH

This switch is used in song mode to delete a step within a song sequence. Consult the chapter "Song Mode" for more information.

INSERT SWITCH

This switch is used to insert a step into a song sequence. Consult the chapter "Song Mode" for more information.

ENTER SWITCH

"Enter" is used to enter data into memory. There are several types of information which can be stored and several methods of entry. Some examples of things that can be saved in memory are: scenes, songs, and system parameters. The next chapter explains how to save a scene. The chapter "Song Mode" describes how to create and save a song and the chapter "Special Functions" tells about the system parameters which can be stored.

3 - SLIDE CONTROLS

CHANNEL FADERS

Figure 2 shows a diagram of the front panel of the PLC 816. The eight channel faders are grouped to the left of the panel and are labeled 1-8 at the top and 9-16 at the bottom. Eight faders are used to control sixteen channels. The "BANK" switch to the left of the sliders allows you to select which channels you are currently addressing, 1-8 or 9-16. The bank LEDs to the left of the numbers will indicate which channels are currently active. A channel fader determines the relative brightness of the lamps which are connected to that particular channel. The channel faders are used to create "scenes" or "looks" which can then be stored in memory for later recall during the performance. All channel sliders are scaled by the "Grand Master" fader. This is explained in more detail in the following section on the "Grand Master".

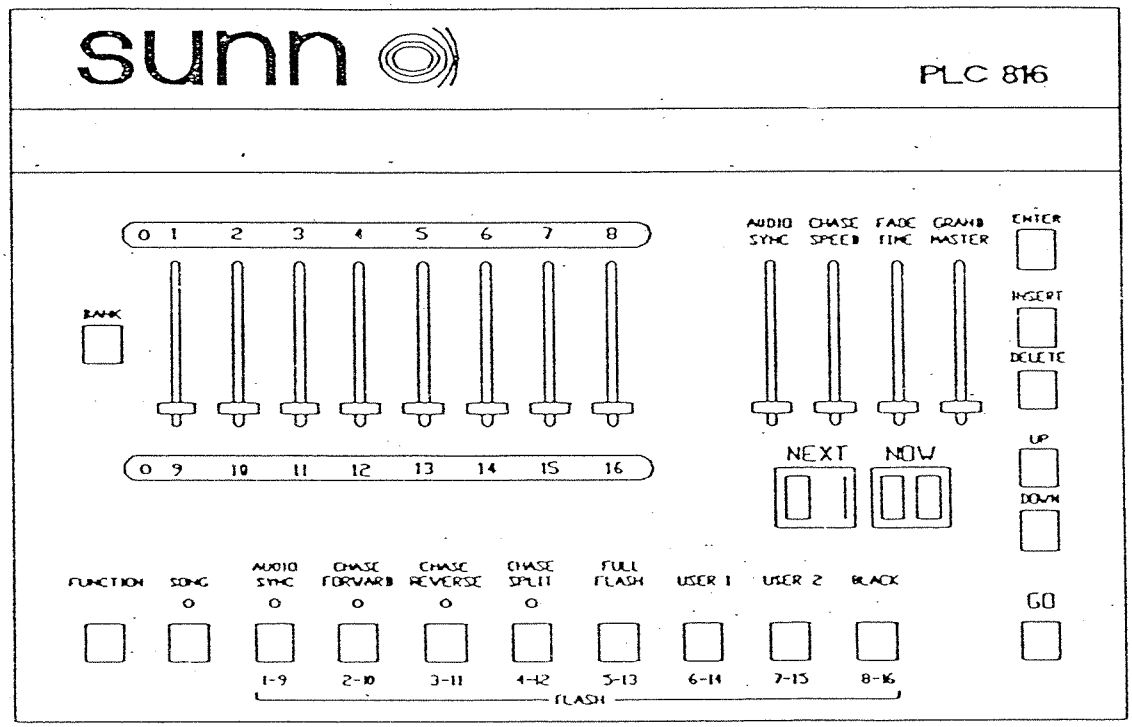

fig. 2 front panel

Whenever you move a channel fader several things happen. First the lights connected to that channel immediately begin to follow the movement of the slider. NOTE: The "Grand Master" must be set high enough to allow changes to be noticed. Also the period in the "Now" display will light up. This indicates that the current scene has been modified from its stored value.

this with as many cords as necessary to arrive at the required length. In similar fashion an audio snake may be wired in series with a mic cord. Note however, that any cord used in this application must be wired properly. Pin 1 on the male connectors must always correspond to pin 1 on the female connectors, the same for pins 2 and 3.

CAUTION: Once a mic cable has been plugged into a dimmer pack, be certain that no microphone is accidentally plugged into the other end of the cable, as this may destroy the microphone.

In order to utilize all sixteen channels of the PLC 816, at least sixteen channels must be available on your dimmer packs; this is possible by using four or more four channel dimmer packs. (If you are connecting to the DePlex 216, it will receive all sixteen channels.) Naturally, if you do not need all sixteen channels you can use the PLC 816 with fewer dimmer packs, adding more as future needs dictate. All SUNN four channel dimmer packs are factory set to respond to channels 1-4, therefore you will have to change the "addresses" of any dimmer packs that you want to respond to channels 5-16. Your dimmer pack operator's manual explains how this is done. The outlets on four channel dimmer packs are marked 1, 2, 3 and 4. If the dimmer pack is set up to respond to channels 1-4, the outlet markings correspond to the channels on the PLC 816. If the dimmer pack is set up to respond to channels 5-8, then outlet 1 on that dimmer pack corresponds to channel 5 on the PLC 816, outlet 2 to channel 6 and so on. Similarly, the dimmer pack addresses may be set so that outlets 1-4 correspond to channels 9-12 or 13-16. You may also opt to have more than one dimmer pack set to the same group of four channels. In many applications it is preferable to have more than one lamp per channel.

CAUTION: The AC outlets on the older style SUNN dimmer packs are ONLY for resistance type loads (e.g. quartz or incandescent lamps). DO NOT connect transformer or ballast type lamps (low voltage "rain lights," mercury, halide or fluorescent lamps) or anything other than lighting fixtures (guitar amps, fans, refrigerators, etc.) to the outlets. Extension cords, however, may be connected between the outlets and the lighting fixtures. FAILURE TO OBSERVE THE ABOVE PRECAUTIONS MAY VOID THE WARRANTY AND CAUSE DAMAGE TO THE DIMMER PACK AND TO THE CONNECTED EQUIPMENT.

When you plug the dimmer pack(s) in, you will obtain the best results if you adhere to the following rules:

- Use a power outlet located as close as possible to an electrical service panel (fusebox). It is best if that outlet is on a separate fuse or circuit breaker from your audio equipment.
- Always use quality 16 gauge (or heavier) grounded extension cords.
- Make certain that the rating of the breaker or fuse for the chosen outlet is adequate. The required rating (in amps) of the fuse or breaker can be calculated with the formula:

$$\frac{P}{I} = E$$

where I = the current (amps)
P = the power (watts)
E = the voltage (volts)

In a standard 120 VAC electrical system, 100 watts = 5/6 amp. A safe rule of thumb is to call 100 watts 1 amp. Thus, if you are using four 500 watt bulbs (2000 watts total), you should have at least a 20 amp service.

IMPORTANT! Do not run any lighting power cords near sensitive audio cables (e.g. mic cords, guitar cords, snakes, etc.).

AUDIO SYNC INPUT JACK

In order to use the audio sync feature an audio signal must be patched into this 1/4" phone jack. Effective signal sources include microphones, outputs from mixing consoles, drum machines, etc. Generally, lower frequency audio signals at line level produce best results.

When using a balanced source, such as a low impedance balanced microphone or the balanced output of a mixing console, a balanced to unbalanced transformer (Shure type A95UF) should be used to convert to an unbalanced signal at the sync input. Only shielded audio cable should be used between the audio source and the audio sync input jack.

FOOTSWITCH JACK

This jack is for the footswitch provided with the PLC 816. It is a momentary, normally open type switch that exactly duplicates the "GO" switch on the front panel of the PLC 816.

MIDI IN

This is the MIDI input jack. You would normally connect this to the output of a MIDI sequencer or MIDI controlling device. Consult the MIDI section of this manual to find out which functions are controllable via MIDI.

MIDI OUT

This is the MIDI output jack. You would normally connect this to the input of a MIDI sequencer in order to record scene or control changes. Consult the MIDI section of this manual for more information on using a MIDI sequencer.

MIDI THROUGH

The MIDI data at the MIDI input is duplicated here to allow daisy chaining of several MIDI devices along with the PLC 816.

6 - SONG MODE

Song mode is ideal for someone who needs to step through an entire light show from the footswitch. It allows you to store a series of scene numbers and corresponding fade times in random orders called "songs". During performance the scenes can then be recalled as steps in a song by simply pressing "Go" or the footswitch at each cue point. Remember though, you must press and hold the switch for at least .2 seconds to achieve a fade, a quick switch press will call the scene instantly with no crossfade.

There can be up to 30 songs with each song addressing up to 99 steps. The amount of memory available inside the PLC 816 is limited though and there is not enough for all 30 songs to contain a full 99 steps. But the memory can be adjusted by one of the special functions to allow more song memory in exchange for less scene memory. For small systems, 101 scenes are far more than what is needed so for each scene number that is sacrificed, 8 song steps can be gained. Consult the chapter on "Special Functions" for information on how to re-configure the memory.

To enter song mode, press the song switch. The LED above the switch will light and the letters "Sn" will appear in the "Next" display and "01" will appear in the "Now" display. This indicates that you are ready to enter song number 1. At this point you may either select a different song number or go ahead and begin song number 1. To select a different song number use the up and down switches. (Whenever "Sn" is displayed in "Next" you are in song select). To call the first step of the song hit "Go". Once you are in the song, "Next" will display "01" indicating that you are at the first step in the song and "Now" will display the scene number stored at that step. If the song is empty, "E-" will be displayed in "Now" at the first step. "E-" indicates the end of the song or the end step. Therefore if there is nothing stored in the song, the first step will be the end step.

During song mode, "Next" is used to display the song step (1-99) and is also used to indicate song select mode ("Sn" displayed). This is different from the normal mode of operation for the PLC 816 where "Next" shows the next scene to be called. "Now" will continue to show the current scene on stage as before.

ENTERING SONG INFORMATION

Before you can make a song you need to first create the scenes that you will be using in the song. Consult the previous chapter on saving scenes if you haven't already done so. It is often helpful to work from a prepared cue sheet which contains the scene numbers and fade times at the proper cue points in the song, that way you can simply enter the scene numbers with their corresponding fade times into the PLC 816 right off the list. Once entered, there are facilities provided for quick editing of the song list in memory.

Let's begin with a song that contains no song information. "Next" should say "01" and "Now" should say "E-", indicating that the first step is the end of the song. Press the "Enter" switch once, the step number in "Next" will start to flash indicating that step 1 is ready to record. To abort the enter process, simply press "Enter" again and the step number will stop flashing. Select the scene number you want to place at step 1 by using the up and down switches.

FLASH CHANNELS

With one of the "Special Functions" (F0) enabled some of the switches double as individual channel flash switches. There are numbers printed under the switches which show the channels that are flashed when this mode is active. Please consult the chapter entitled "Special Functions" for more details.

5 - SAVING SCENES

Once you have created a look on stage either by setting the individual light channels to different values or by calling up one of the special effects, you will want to save it to memory. Once it has been saved it will always be available for later recall until you later edit it or overwrite the particular scene with a new one. Memory is not lost when you turn the PLC 816 off.

The values you will be saving are the individual light channel values (not the grand master), whether or not audio sync is on, and any chase mode that's in effect along with the chase speed. To save the current stage setting, first press "Enter", the letters "En" will flash in the "Next" display showing that you are now in enter mode. With the "Up" or "Down" button, select the number in the "Now" display that you want to assign to the new scene. Once you have selected the number, press "Enter" again and hold it down for 2 seconds. When "En" stops flashing, the scene is saved. If you only want to edit or touch up an existing scene, call up the scene, make any adjustments with the channel sliders or effects switches, then simply hold down the "Enter" switch for 2 seconds. When "En" stops flashing, the scene is saved at its original number. After a scene is saved, the period will disappear from the "Now" display showing that the current stage scene is no longer an edited version but the actual stored value.

While in enter mode ("En" flashing in "Next"), you can also assign the current stage scene to one of the user switches instead of a number. Simply press "User 1" or "User 2" instead of using "Up" or "Down" to select the scene number. "U1" or "U2" will appear in the "Now" display. Hold down "Enter" for 2 seconds as before.

The "Now" display will show the selected scene number and if you have lights connected, the stage will also change to show your selection. (NOTE: Even though "E-" may be what's in the "Now" display, the last used scene will be the one that's actually up on the stage. Hitting "Go" while the step number is flashing will replace "E-" in "Now" with the scene number of the current stage scene for reference.) Once you have selected the scene, adjust the fade time slider to the crossfade time you want to use when crossfading from the previous scene. The fade value stored with each song step is the time it will take to fade into that step. Once you have selected the fade time, simply hold down the enter switch for 2 seconds. After the step has recorded, "Next" will automatically increment to the next song step and "Now" will display "E-" indicating that the end has now been moved up one step. The step number will remain flashing indicating that you may now enter the next step in the song. If you are finished entering, press "Enter" once again (do not hold for 2 seconds) and you will exit enter mode.

Once you have already entered a song list, there are several different editing functions provided to help you make changes to the song without re-entering the whole thing. You can also scan through the steps of a song at high speed by pressing and holding the up or down switch. As long as you are not recording a song (step number in "Next" flashing), or are in song select ("Sn" in "Next"), the up and down switches allow you to move to a desired step in the song. The scenes that are called using these switches are called on stage instantly though, with no fade time. This also allows the down switch to be used during performance to back up one step.

EDIT SCENE NUMBER

To change the scene number stored at a particular step, first advance or retreat to that step in the song, then hit "Enter" once. The step number will flash indicating that it's ready to record. Select the new scene number with "Up" or "Down" (make sure the fade time slider is where you want it because it gets recorded also), then hold "Enter" for 2 seconds. When the step number stops flashing, the new scene has been recorded.

EDIT FADE TIME

To change the fade time at a particular step, go to that step in the song, adjust the fade time slider to the desired time, then hold down "Enter" for 2 seconds. When the step number stops flashing, the new fade is entered.

DELETE STEP

To delete a scene from a song, go to that step, then press "Delete" and while still holding it down, press "Enter". Hold down both keys for 2 seconds. When the step number stops flashing the scene at that step will be erased and all subsequent scenes will be moved down one step to fill the gap.

To remove several scene steps, go to the first step you want to remove, then press "Enter" once. The step number will flash indicating record mode. To remove that step, hold "Delete" for 2 seconds (you don't have to hold "Enter" this time). The remaining steps in the song will then all be moved down one notch to fill the gap left by the one removed. You may then repress and hold "Delete" for as many steps following that you want to remove from the song. When you're finished press "Enter" once again to leave record mode.

7 - MIDI

With MIDI you can do the following: Record your control changes (slider moves, switch presses, special effects, etc.) with a MIDI sequencer and play them back into the PLC 816 for an automated lighting sequence, control the PLC 816 from another source such as a MIDI keyboard or percussion controller, transfer the memory from one PLC 816 to another or to a computer for storage.

If you've never used MIDI before, here is a very brief description of what it does. It provides a digital interface for connecting one MIDI instrument to another MIDI instrument by means of a single MIDI cable. What happens after they are connected depends a lot on the particular instruments you're using and how they were designed to use MIDI. For the most part, MIDI was designed to transfer musical performance information, especially information related to synthesizers (e.g. note on, note off, control change, etc.). Fortunately this same information lends itself easily to instruments like the PLC 816 lighting controller.

MIDI, like audio, requires separate lines for input and output. If you are working with a MIDI sequencer, you will want to connect the MIDI out of the PLC 816 to the MIDI in on the sequencer and the MIDI out of the sequencer to the MIDI in on the PLC 816. If you are only controlling the PLC 816 from a remote MIDI source such as a keyboard, you only need to connect the MIDI in on the PLC 816 to the MIDI out of the controlling device. The MIDI through jack on the PLC 816 enables you to daisy chain other MIDI instruments to the incoming MIDI signal. To do so, connect the through jack from one device to the MIDI in of the next device in the chain.

The PLC 816 makes use of MIDI program changes, MIDI continuous controllers (sliders) and MIDI switches. It can also respond to MIDI note numbers such as those sent by a MIDI keyboard or a MIDI percussion controller. It also uses MIDI system exclusive messages to transfer its memory contents. A list of the MIDI messages that are sent and received by the PLC 816 is given at the end of this chapter.

Scene changes are sent out from the PLC 816 as MIDI program changes. In addition each light channel is given its own MIDI continuous controller number. The controller numbers used for this are 16 - 31, starting with light channel number 1. Controller number 13 is assigned to the Grand Master slider, controller number 14 to the Fade Time slider, and controller number 15 to the Chase Speed slider. The level for each control can vary from 0 (off) to 127 (maximum). This allows a sequencer to record movements from these sliders as continuous controller changes.

The following switches can transmit a press or release using MIDI switch numbers. Chase Forward uses switch number 91, Chase Reverse uses 92, Chase Split uses 93, Full Flash uses 94, and Audio Sync uses 95. MIDI switches send a value of 127 for on and 0 for off.

USING A MIDI SEQUENCER

All sequencers are different in their number of features and their ease of use. Become familiar with the one you are using before attempting to use it with the PLC 816. Make sure your se-

quencer is capable of recording continuous controller information if you intend to record slider moves and switch presses and not just scene changes. Most sequencers can but a few only record notes in addition to some other musical information.

All MIDI sequencers have one thing in common, they record MIDI information and then play it back. With the PLC 816 you can record scene changes, any slider move except the Audio Sync slider, and you can record the following switch presses: Audio Sync, Chase Forward, Reverse, and Split, Full Flash, User 1 and 2 (recorded as scene changes), and individual channel flashes when using the flash mode from "Special Functions".

When recording the PIC 816 with your sequencer, scene changes initiated when you press "Go" will be recorded as a fade time value followed by a MIDI program change message. The fade time value is sent as a MIDI control change. When you move a slider, either a channel slider or one of the other sliders except Audio Sync, a MIDI control change message will be recorded. Whenever one of the switches are pressed or released (only those switches listed above), a MIDI switch on or off message will be recorded. Whenever an individual channel is flashed when using the flash mode in "Special Functions", a MIDI control change value of full channel intensity (127) and a value of 0 will be recorded when the individual flash switch is pressed then released. You will find when recording lighting information, that unless you are recording a lot of slider moves, the PLC 816 uses very little sequencer memory.

When playing the recorded MIDI information back into the PLC 816, the lights will respond as recorded. One important thing to remember though is that the Grand Master scales all lighting signals whether they are from actual slider moves or from MIDI. This means that if you record your channel slider moves then adjust the Grand Master during playback, the overall intensity of all the lights will change but they will still remain the same relative to each other. You can think of the Grand Master like a master volume control in audio applications.

Be careful when recording Grand Master slider moves. If during record you were to pull the Grand Master all the way off, during playback the internal Grand Master level will go to zero regardless of the position of the Grand Master slider. It will remain at zero until it is moved back up, either by someone moving the Grand Master slider or by receiving a MIDI message which tells it to go back up.

It is best to give the PLC 816 its own MIDI channel while sequencing if there are other MIDI instruments being driven by the same sequence. The MIDI channel on the PLC 816 is set to channel 1 at the factory but you can change it from one of the special functions. Consult the chapter "Special Functions" for more information.

The simplest type of lighting sequence is a recording of scene changes at appropriate cues in a piece of recorded music. This only requires selecting a scene in "Next" and hitting "Go" at the right spot while overdubbing your lighting track. Since scene changes are recorded as MIDI program changes, you can see why a separate MIDI channel for the lights is a good idea. You wouldn't want your synthesizer changing programs each time you hit "Go". If your sequencer allows multi-tracking, a separate track for the lights is also a good idea. If your sequencer allows merging of tracks, a good method of recording complex lighting changes is to use two tracks to create the lighting sequence. You can record as many changes as you can execute on the first track, then add more changes by recording them on to another track and then merging or "bouncing" them over to the first track whenever you have them right. This way you don't have to try to do it all in one pass and you can take the time to get

each pass right, "piling on" to the good track only when it's perfect. This method is good for recording lots of musically synced flashes that you normally couldn't execute with one pass in real time.

USING A MIDI CONTROLLER

If you're driving the PLC 816 from a MIDI keyboard or some other type of MIDI controller, you have several options. You can use MIDI control change messages to control the level of the individual light channels or you can use MIDI note numbers. The notes that the PLC 816 responds to are middle C (note number 60) through D# one octave higher (note number 75). Light channel 1 is assigned to middle C with each consecutive light channel assigned to the next consecutive note number (increasing by musical half steps). The velocity of the note received will determine the brightness of the light (scaled by the Grand Master). A note off (key release) will turn the light off. Be sure to allow a note of sufficient duration to turn the light on. Quick notes won't be noticed because of the slowness of the lamp filaments to come to the desired intensity. If you are using a percussion controller to drive the lights from a drum set for example, adjust the controller so that a drum will output the desired MIDI note number assigned to the particular light channel that you want the drum to flash. If the controller will send velocity, the intensity of the hit will determine the brightness of the flash. Program the controller so that it sends a note off following the note on after a long enough time to achieve the desired effect.

Note: The PLC 816 does not send MIDI notes even though it will respond to them.

Another possible use would be to control lighting functions from a dedicated MIDI keyboard controller. If the controller has programmable sliders or pedals, you can control the Grand Master, Chase Speed, or individual light channels from your MIDI keyboard. You could also call scenes by making program changes from the keyboard.

DUMPING THE MEMORY

The PLC 816 allows for memory transfer via MIDI system exclusive messages. A memory dump is initiated from one of the special functions. Consult the next chapter for more information. A memory dump can only be received by the PLC 816 while it is in enter mode ("En" is flashing in "Next") and song is turned off. While a dump is being received, "rd" will appear in "Now". The display will be restored when the dump has been received. If an error occurs during the receive process, the message "Er" will appear in "Now".

You can use the memory dump function to transfer the contents of one PLC 816 to another or you can transfer to a computer for storage to disk. You must have special software and a MIDI interface for your computer to do this. A generic MIDI data dump program will only work if it can send the data back to the PLC 816 at the same speed as it was recorded. This is necessary because the memory in the PLC 816 is slow writing and cannot keep pace with the speed at which MIDI is capable of sending its data. There must be a delay of at least 5 milliseconds between each memory dump byte that is sent to the PLC 816. The system exclusive format is included at the end of this chapter.

MIDI DATA FORMAT

All numbers are expressed in hexadecimal unless stated otherwise.

TRANSMITTED AND RECEIVED DATA:

Grand Master slider	Bn 0D vv	(n = MIDI channel 0 - F)
Fade Time slider	Bn 0E vv	(vv = slider position 0 - 7F)
Chase Speed slider	Bn 0F vv	
Light Channel 1	Bn 10 vv	
Light Channel 16	Bn 1F vv	
Chase Forward Switch	Bn 5B vv	(for switches vv = 0 or 7F)
Chase Reverse Switch	Bn 5C vv	
Chase Split Switch	Bn 5D vv	
Full Flash Switch	Bn 5E vv	
Audio Sync Switch	Bn 5F vv	
Scene Change	Bn 0E vv Cn pp	(pp = program no. 0- 63)
User 1 Switch	Bn 0E vv Cn 64	
User 2 Switch	Bn 0E vv Cn 65	
Memory Dump	F0 08 4C 01 7F aa aa aa aa dd..... F7	

First 5 bytes are dump header, aa = highest used memory address in nibblized form high address sent first, dd = memory contents in nibblized form sent high nibble first (length determined by amount of memory used). If dump is initiated by front panel, a 5 ms delay is inserted between data bytes. If requested by MIDI dump request message, no delays between data.

RECEIVED ONLY DATA:

9n 3C vv	note on received by light channel 1 (vv = velocity)
9n 4B vv	light channel 16
8n 3C vv	note off received by light channel 1
8n 4B vv	light channel 16
F0 08 4C 01 00 F7	memory dump request

8 - SPECIAL FUNCTIONS

There are eight special functions provided which are accessed by pressing the switch labeled "Function". In order to reach a specific function, you must hold down the function switch while pressing the up or down switch. The "Next" display will show "F" followed by the function number (0-7). Once the desired function number is reached, release the function switch and depending on the function, use "Up" or "Down" to set the value. Once set, you can exit function mode by pressing "Function" once again. Whenever a special function involves choosing a particular value, that value will be stored in memory until you decide to change it again. The special functions are as follows:

- F0 - Switches now become flash buttons.
- F1 - Set MIDI channel.
- F2 - Set maximum chase channel.
- F3 - Display amount of song memory remaining.
- F4 - Initiate memory dump.
- F5 - Set MIDI transmit mode.
- F6 - Re-configure memory.
- F7 - Reset entire memory.

F0 - FLASH MODE

This special function will probably be the one you use most. It allows you to flash individual light channels by temporarily changing the bottom row of switches into flash buttons. The switches are labeled below with the channel numbers they address. The bank switch determines whether you are flashing channels 1-8 or 9-16. You can easily jump in and out of flash mode by simply pressing the function switch once. The grand master level determines the brightness of the flash. In addition, "Go" will become the full flash button. The channel that is flashed will remain at its maximum as scaled by the grand master for as long as the switch is held. In order to notice a change, the particular channel being flashed cannot already be at or near maximum. When the switch is released, the channel will return to its previous level. A MIDI value will also be transmitted whenever the flash switch is pressed or released.

F1 - SET MIDI CHANNEL

Use "Up" or "Down" to set the MIDI channel as displayed in "Now". This will be the MIDI channel that the PLC 816 transmits and receives on. Setting the value to "00" sets it to omni mode. In omni mode, the PLC 816 will transmit on MIDI channel 1 and receive on all incoming MIDI channels indiscriminately.

F2 - SET MAXIMUM CHASE CHANNEL

Use "Up" or "Down" to set the last light channel you want flashed whenever a chase effect is called. Normally this would be set to the maximum number of light channels you are using

in your system. The lowest chased channel will always be channel 1. Selective programming of individual chase channels is not possible.

F3 - DISPLAY AMOUNT OF SONG MEMORY LEFT

When this function is selected, "Now" remains blank until you press "Go". As long as "Go" is held, "Next" and "Now" will show you the number of song steps still available in memory. If you find you are running out and will need more, use function 6 to gain more song memory.

F4 - INITIATE MEMORY DUMP

Function 4 is used to transfer the memory contents from one PLC 816 to another or to a computer. To transfer, connect the MIDI out from the PLC 816 to the MIDI in of the receiving PLC 816 or computer. If transferring to another PLC 816, make sure that the receiving unit is in enter mode ("En" flashing in "Next"). Press "Go" and "F4" will begin to flash in "Next". If sending to another PLC 816, "rd" should appear in "Now" on the receiving unit. When "F4" stops flashing, the transfer is complete.

F5 - MIDI TRANSMIT MODE

There are two settings for this function, "Se" or "di". "Se" stands for sequence and "di" stands for display. Normally this should be set for sequence ("Se"). This setting is designed to let the PLC 816 work best with a MIDI sequencer. Much less MIDI data is transmitted in sequence mode which uses up less memory on a MIDI sequencer while recording. Display mode ("di") is used when you connect the PLC 816 to a computer to graphically depict the scenes and effects that are currently active. (This would require special software for your computer). In display mode much more MIDI data is transmitted than is necessary for sequencing but which is essential to show the current status of every lighting channel. For example, in sequence mode when you move the grand master slider, you only transmit MIDI controller information for one slider move, the grand master slider. In display mode, controller information is sent for each and every light channel, sixteen times as much data. This would very quickly eat up all of the memory in some smaller sequencers. In the previous example the channel information is essential for display purposes but for sequencing, only the grand master information is needed. The same applies for "Chase" and "Full Flash". In sequence mode only a switch press needs to be sent. In display mode, channel information is sent for each individual channel as it is flashed.

F6 - CHANGE MEMORY CONFIGURATION

For this function, the highest available scene number is displayed in "Now". This will be set to "99" from the factory. This means that you can have 99 scenes in memory to work with (101 including User 1 and 2). This will only leave you with enough memory for 197 song steps. For most systems 99 scenes is far more than what is needed. You can give up some of your scene memory in exchange for more song memory. For each scene that you give up, you can gain 8 song steps in return. For example if you reset the maximum scene value from 99 to 50, you will increase the number of song steps to 589, a gain of 392 song steps. To re-configure, use "Up" or "Down" to set the number of the highest scene you will need in "Now". Press "Enter" and hold it down for 2 seconds. When "F6" stops flashing, the process is complete. If you are changing from a higher value to a lower value, you are losing the use

of any scene numbers above the selected maximum. This also means that if you have any songs already written that use those scene numbers that are now lost, the song will no longer be able to call the lost scene when it is stepped to. "--" will appear in "Now" during song mode whenever a scene is called that no longer exists. If you are changing the maximum scene number from a lower value back up to a higher one, the re-configure function will only let you set it as high as there is memory available. If there is not enough song memory to steal back for scene memory, the maximum scene number will only be set as high as possible without erasing any song data. For example, if you try to set the max scene back to 99 from 50 after you have used up 200 song steps, max will only go back to 98 until you go back into song mode and erase some song memory.

F7 - RESET ENTIRE MEMORY

This allows you to reset all memory settings back to their default values. All function values are reset and **all song memory is erased.** To execute, hold down "Delete" then press "Enter" and hold down both for 4 seconds. The system will reset to the power up state when finished.

If there is still a problem in the dimmer pack, refer it to a qualified service technician.

LIGHTS

If you suspect a burned-out light, try plugging it into a working channel. If it still doesn't come on, replace it. Lights may also be tested by plugging them directly into any 3-prong AC outlet (be careful, the lights get hot and they are bright). Replace any burned out lights.

MIC CORD

The quickest way to determine if you have a faulty mic cord is to swap it with one that is known to be good. If the problem disappears, your cord is probably bad. Cords can be tested easily with an ohmmeter. Measure the resistance between pin 1 on the male end and pin 1 on the female end. The reading should be close to 0 ohms. Now repeat the test for pins 2 and for pins 3. If these readings are correct, measure between pin 1 and 2, between pin 1 and 3, and between pin 2 and 3 on one of the connectors. The meter should show an open circuit. If the cord is bad, repair or replace it.

CONTROLLER

When the PLC 816 is first powered up, the numbers in the "Next" display should read "01" and the numbers in the "Now" display should read "00". If this is not the case, check the power pin from the dimmer mic cable with a volt meter to see if it is delivering at least +15 VDC. Excessive resistance in the mic cable or its connectors can result in faulty operation. To check the power coming from a dimmer pack, measure the voltage between pin 1 (ground) and pin 2 of the cord. +15 VDC should be present at pin 2. If voltage is present to the PLC 816 and the LEDs or displays do not light, there is a problem with the controller. If the LEDs do light, but the controller doesn't affect the stage lights, re-check the mic cord. If you have a system which is using more than four channels, make sure that the dimmer pack you are testing is set up to be addressed by the desired channels on the PLC 816. There are no user-serviceable parts in the PLC 816, therefore, any internal problem with it should be referred to a qualified service technician.

9 - TROUBLESHOOTING

PROBLEM: Buzz in the audio system.

Lighting control and audio signals have always been enemies. That annoying little buzz is caused by switching transients, which are high current spikes of power originating in the triacs that control the intensity of the lights. These transients are the source of a couple of different kinds of interference. One of these is radio frequency interference (RFI), which radiates from unfiltered control systems and is picked up by the audio system. SUNN dimmer packs control this problem with high frequency filters that suppress the RFI.

If a buzz is present, make sure you have followed the rules listed in Chapter 2. In addition, always follow good audio practices:

- Use balanced (3 pin) cables.
- Use high quality instrument cords.
- Use three wire (grounded) power cords on instrument amplifiers.
- Repair faulty jacks on guitars and equipment.

This should eliminate any buzz caused by the lighting system. However, if you still have problems, try plugging the dimmer packs into another AC outlet.

PROBLEM: High pitched whine in the audio system.

If a whine is present and you are sending controller signals through a snake, then either the snake has some unbalanced channels, or it has excessive crosstalk. If either is the case, use a mic cord. (NOTE: a whine on unterminated or unused channels may be normal).

PROBLEM: The lighting system does not operate properly.

Whenever you troubleshoot any system, first verify that it is correctly interconnected and that it is plugged into a working AC outlet. Next, isolate the problem to one part of the system by verifying the proper operation of the other parts.

DIMMER PACKS

All SUNN dimmer packs have a self-test feature built into them; with lights plugged into the dimmer pack, and the dimmer pack plugged into an AC socket, the lights will come on at full intensity when no mic cord is attached to the dimmer pack. If any lights do not come on, and the lights are known to be good, the problem may be caused by one or more blown fuses inside the dimmer pack. These should only be replaced by qualified service personnel.

> WARNING: Busses, triacs, heatsinks and parts of the circuit board are at 120 VAC potential. Do not open the case without first disconnecting the AC cord. Install only fuses of the same rating indicated on the circuit board.

DELETE SONG

To remove an entire song, select the song you want to remove by going to song select ("Sn" displayed in "Next"), and selecting the song number in "Now" with the up or down switch. Hold down "Delete" then press "Enter" and hold down both for 2 seconds. When "Sn" stops flashing, the song has been erased.

INSERT STEP

To insert a new scene into an existing song list, first go to the step in the song where you want the new one to be added, then press "Enter" once to go into record mode (step number in "Next" will flash). Press "Insert" and "__" will appear in the "Now" display. This indicates that this step is ready for a new scene to be inserted. You may abort the insertion process at any time by leaving record mode by pressing "Enter" once again. Select the scene number and fade time for the new step you want to insert. Once selected, hold down "Enter" for 2 seconds. After the step number stops flashing, the insertion is complete and all subsequent scenes in the song order will be moved up one step to accommodate the new one.

NOTE: Depending on how much song memory is currently being used, the amount of time needed to store the insertion will vary. This is because the entire memory is being rearranged to make room for the new step. This also applies to other song memory operations.

ADDING MORE STEPS TO END OF SONG

This is basically the same operation as starting a new song from scratch. First go to the end step ("E-" displayed in "Now"), then go into record by pressing "Enter" once. Add a new scene by selecting the values and then holding down "Enter" for 2 seconds, the song step will automatically be incremented to the next step after the the new scene has been added and you will remain in record mode. This makes it convenient to add a series of entries to the end of a song. As before, simply press "Enter" again to exit the record mode.

REFERENCE #	PART #	MFG. #	DESCRIPTION	QTY
R9-20	026372	------	Control Slide 100K linear	12
R21-24,29-32	017372	------	Resistor MF 51.1K 1/4W 1%	8
R25	024971	------	Resistor CF 2.2K 1/4W 5%	1
R26	024965	------	Resistor CF 1K 1/4W 5%	1
R27	024997	------	Resistor CF 100K 1/4W 5%	1
R33	026368	------	Resistor CF 100ohm 1/2W 5%	1
R34	026626	------	Resistor MF 6.65K 1/4W 1%	1
R35	015718	------	Resistor MF 1K 1/4W 1%	1
RP1	027149	------	Resistor Package 1K X 8 DIP	1
RP2	027150	------	Resistor Package 100 X 8 DIP	1
RP3	027152	------	Resistor Package 270 X 5 SIP	1
C1	015124	------	Capacitor Elec. 10uf 16V	1
C2,25	027181	------	Capacitor Mono. 0.01uf	2
C3,4,7-24, 26,39,41	024229	------	Capacitor Mono. 0.1uf	23
C5,6	069716	------	Capacitor Disc 33pf	2
C27,30,34,40	015125	------	Capacitor Elec. 47uf 16V	4
C28	026627	------	Capacitor Elec. 1000uf 25V	1
C29,35,36	013640	------	Capacitor Elec. 1uf 50V	3
C31,33	027366	------	Capacitor Elec. 10uf 25V	2
C32	016658	------	Capacitor Mylar 0.0022uf	1
C37,38,42	069724	------	Capacitor Disc 100pf	3
S1	026374	------	Switch Momentary PB ivory	1
S2-17	026373	------	Switch Momentary PB gray	16
J1-3	027154	------	Connector Din PC mt.	3
J4,5	027155	------	Connector Phone plug PC mt.	2
J6,7	027156	------	Connector XLR male PC mt.	2
J8	027157	------	Connector Aux. power	1
BP1-4	58-1601	------	Bumper Stick on	4
SK1-12	59-0002	------	Knob Slide control	12
AC1	027158	------	AC Adapter	1
PCBA	027163	------	PC Board assembly [stuffed]	1

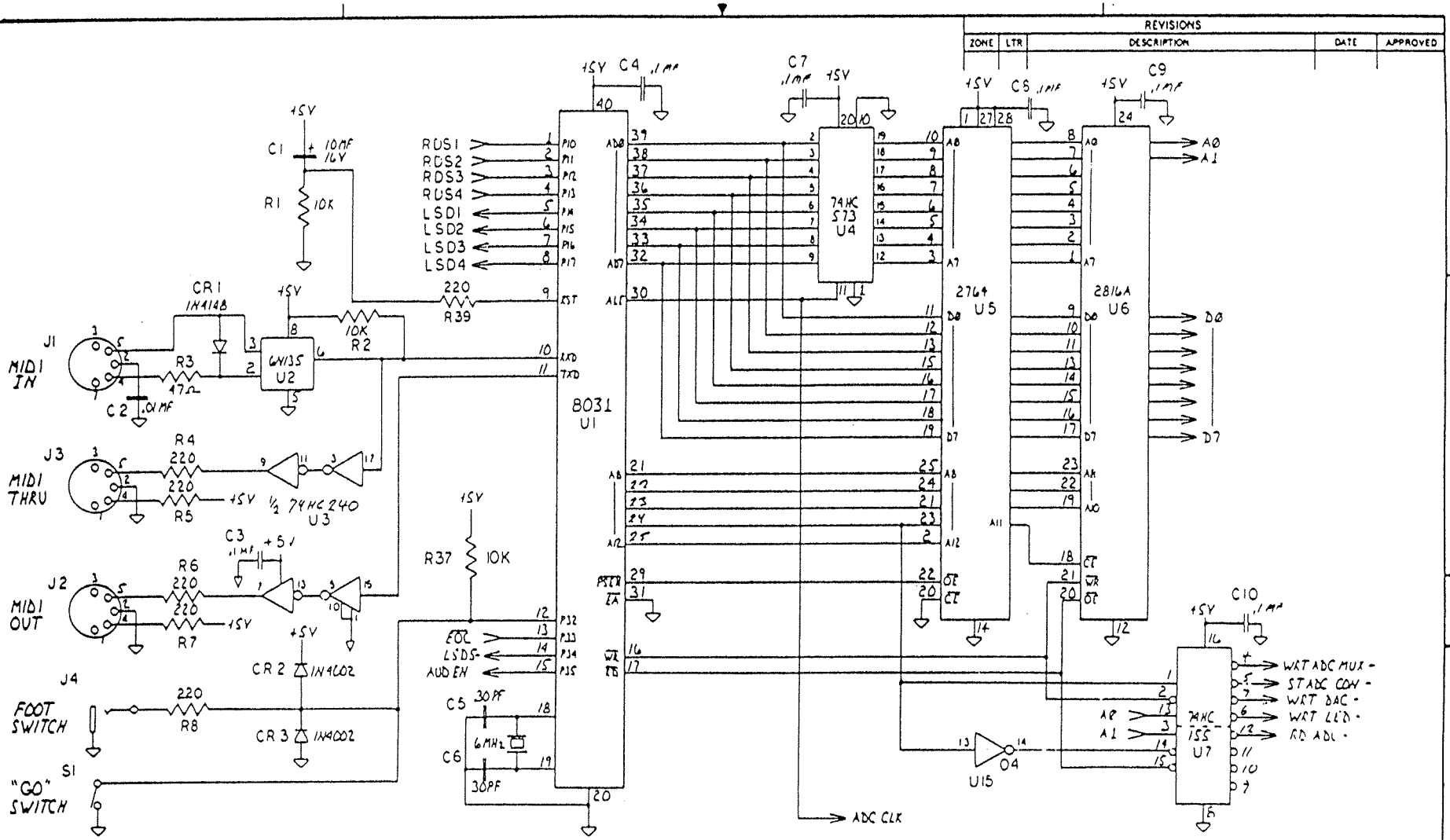

QTY REQD	CODE IDENT	PART OR IDENTIFYING NO.	NOMENCLATURE OR DESCRIPTION

PARTS LIST

UNLESS OTHERWISE SPECIFIED DIMENSIONS ARE IN INCHES
TOLERANCES ARE:
FRACTIONS ± DECIMALS .XX ± .XXX ± ANGLES ±

MATERIAL

FINISH

NEXT ASSY | USED ON

APPLICATION

DO NOT SCALE DRAWING

CONTRACT NO.

APPROVALS	DATE
DRAWN KY	7/10/85
CHECKED	

SUNN PROGRAMMABLE LIGHTING CONTROLLER PLC 816

SIZE C | CODE IDENT NO | DRAWING NO

SCALE | SHEET 1 of 3

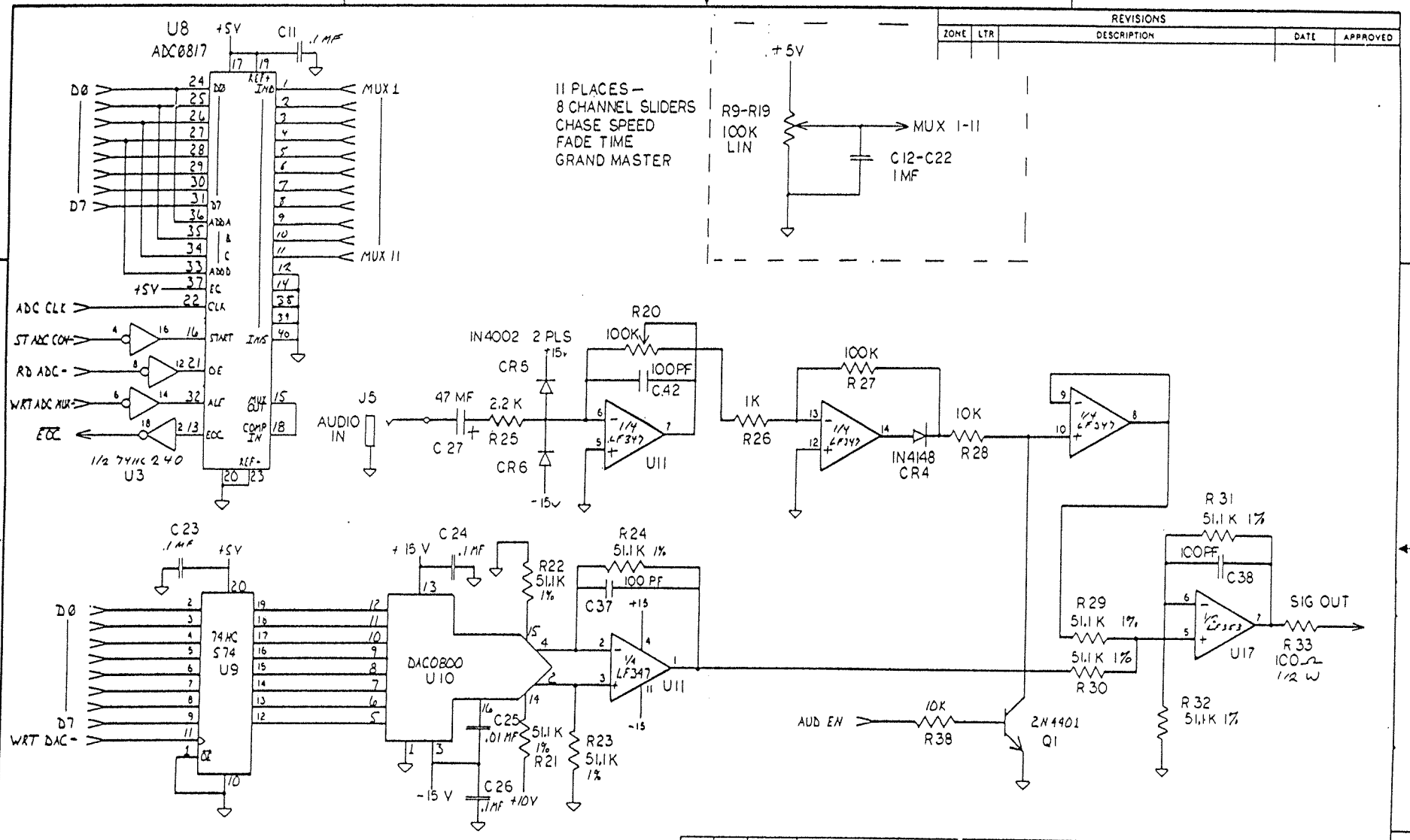

REVISIONS				
ZONE	LTR	DESCRIPTION	DATE	APPROVED

QTY REQD	CODE IDENT	PART OR IDENTIFYING NO.	NOMENCLATURE OR DESCRIPTION

PARTS LIST

UNLESS OTHERWISE SPECIFIED DIMENSIONS ARE IN INCHES
TOLERANCES ARE:
FRACTIONS ± DECIMALS .XX ± .XXX ± ANGLES ±

MATERIAL

FINISH

NEXT ASSY | USED ON

APPLICATION

DO NOT SCALE DRAWING

CONTRACT NO.

APPROVALS	DATE
DRAWN KP	7/10/86
CHECKED	

SUNN PROGRAMMABLE LIGHTING CONTROLLER PLC 816

SIZE C | CODE IDENT NO. | DRAWING NO

SCALE | SHEET 2 OF 3

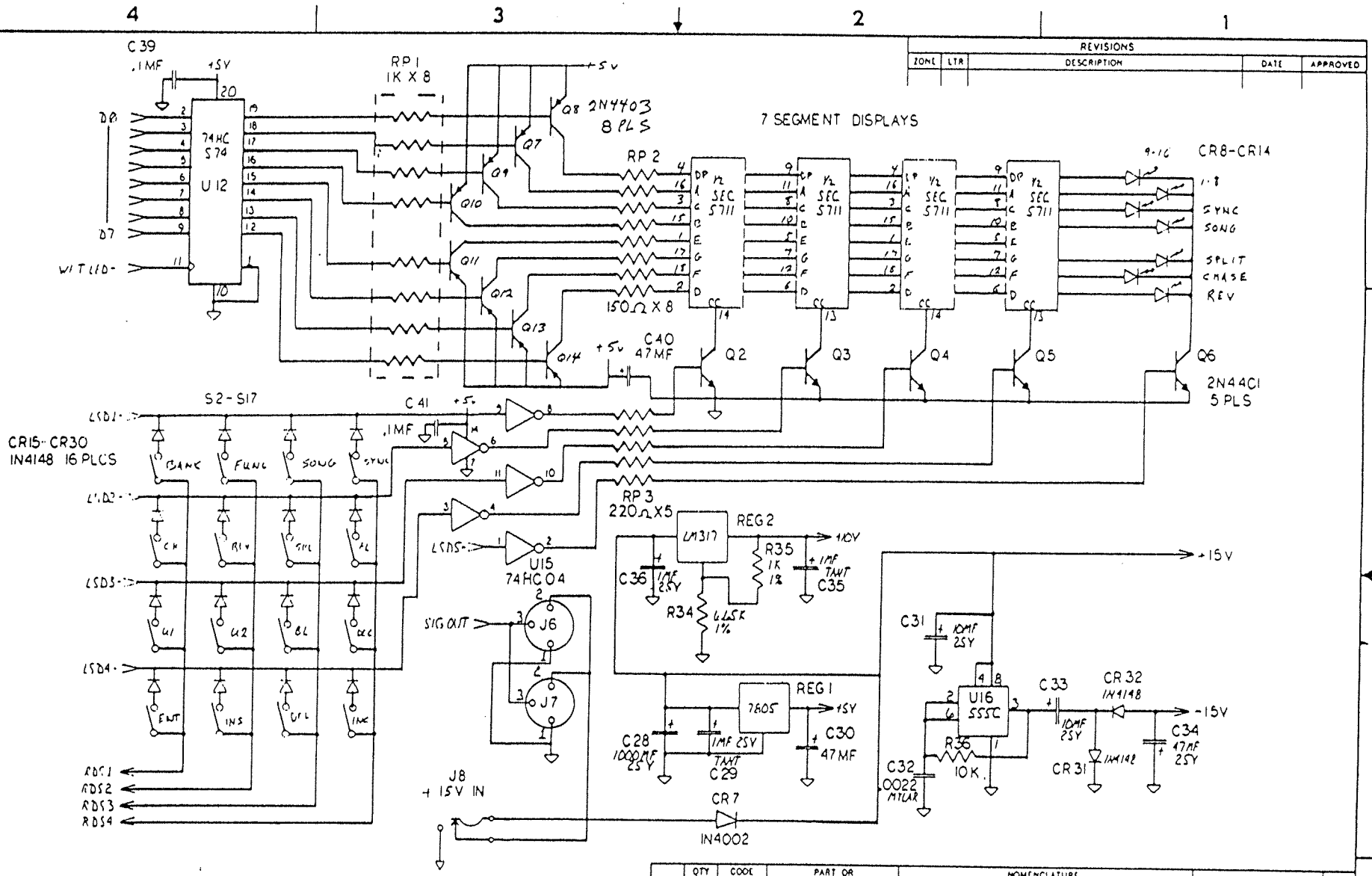

QTY REQD	CODE IDENT	PART OR IDENTIFYING NO.	NOMENCLATURE OR DESCRIPTION

PARTS LIST

UNLESS OTHERWISE SPECIFIED DIMENSIONS ARE IN INCHES
TOLERANCES ARE:
FRACTIONS ± DECIMALS .XX ± .XXX ± ANGLES ±

MATERIAL

FINISH

DO NOT SCALE DRAWING

CONTRACT NO

APPROVALS	DATE
DRAWN KY	7/10/85
CHECKED	

NEXT ASSY | USED ON
APPLICATION

SUNN PROGRAMMABLE LIGHTING CONTROLLER PLC 816

SIZE C | CODE IDENT NO. | DRAWING NO

SCALE | SHEET 3 OF 3

SUNN PLC 816 PROGRAMMABLE LIGHTING CONTROLLER [9909900-420]

PARTS LIST

REFERENCE #	PART #	MFG. #	DESCRIPTION	QTY
U1	026388	8031	I.C. Microprocessor	1
U2	026395	6N135	I.C. Opto-isolator	1
U3	026384	74HC240	I.C. Octal inv/bus buffer	1
U4	026382	74HC573	I.C. Octal D-type latch	1
U5	026380	2764-30	I.C. EPROM	1
U6	026381	X2816A	I.C. EEPROM	1
U7	026389	74HC155	I.C. Dual 2/4 line decoder	1
U8	026379	ADC0817	I.C. A/D Converter	1
U9,12	026386	74HC574	I.C. Octal D-type flop	2
U10	026378	DAC0800	I.C. D/A Converter	1
U11	026376	LF347	I.C. Quad bi-fet op. amp.	1
U15	026387	74HC04	I.C. Hex inverter	1
U16	026394	1455P1	I.C. 555C CMOS Timer	1
U17	016795	LF353	I.C. Dual op. amp. TL072	1
Q1-6	016739	2N4401	Transistor NPN	6
Q7-14	016742	2N4403	Transistor PNP	8
REG1	026390	TA78005AP	Regulator 5V LM7805	1
REG2	026392	LM317L	Regulator adjustable	1
XT1	027153	NDK 060	Crystal 6MHZ	1
DSP1,2	026422	LTD6940HR	Display Dual 7 seg. LED	2
CR8-14	027148	LTL-221	LED red	7
CR1,4,15-32	006260	1N4448	Diode signal 1N4148/4448	20
CR2,3,5,6,7,33	22-2070	1N4004	Diode rect. 1N4002/4004	6
R1,2,28,36-38	024981	------	Resistor CF 10K 1/4W 5%	6
R3	024947	------	Resistor CF 47ohm 1/4W 5%	1
R4-8,39	024956	------	Resistor CF 220ohm 1/4W 5%	6